BILL NO. S-85-12-05

SPECIAL ORDINANCE NO. S- 255-85

AN ORDINANCE approving Civil City Purchase Order #A-45756 with Blue Valley Industries, Inc., for the Department of Parks and Recreation of the City of Fort Wayne, Indiana.

NOW, THEREFORE, BE IT ORDAINED BY THE COMMON COUNCIL OF THE CITY OF FORT WAYNE, INDIANA:

SECTION 1. That Civil City Purchase Order #A-45756, between the City of Fort Wayne, by and through the Civil City Purchasing Agent, and the Department of Purchasing with Blue Valley Industries, Inc., for the Department of Parks and Recreation, respectfully for:

the purchase of 120 picnic tables for the Park Department per the specifications in Reference #1229;

involving a total cost of Twelve Thousand Six Hundred Ninety-Six and No/100 Dollars ($12,696.00), all as more particularly set forth in said Purchase Order, which is on file in the Office of the Department of Purchasing, and is by reference incorporated herein, made a part hereof, and is hereby in all things ratified, confirmed and approved.

SECTION 2. That this Ordinance shall be in full force and effect from and after its passage, and any and all necessary approval by the Mayor.

Councilmember

APPROVED AS TO FORM
AND LEGALITY

Bruce O. Boxberger, City Attorney

Read the first time in full and on motion by Gaskins, seconded by Redd, and duly adopted, read the second time by title and referred to the Committee Finance (and the City Plan Commission for recommendation) and Public Hearing to be held after due legal notice, at the Council Chambers, City-County Building, Fort Wayne Indiana, on _____, the _____ day of _____, 19____, at _____ o'clock ____.M.,E.S

DATE: 12-10-85

Sandra E. Kennedy
SANDRA E. KENNEDY, CITY CLERK

Read the third time in full and on motion by Gaskins, seconded by Henry, and duly adopted, placed on its passage. PASSED (~~LOST~~) by the following vote:

	AYES	NAYS	ABSTAINED	ABSENT	TO-WIT:
TOTAL VOTES	9				
BRADBURY	✓				
BURNS	✓				
EISBART	✓				
GiaQUINTA	✓				
HENRY	✓				
REDD	✓				
SCHMIDT	✓				
STIER	✓				
TALARICO	✓				

DATE: 12-23-85

Sandra E. Kennedy
SANDRA E. KENNEDY, CITY CLERK

Passed and adopted by the Common Council of the City of Fort Wayne, Indiana, as (~~ANNEXATION~~) (~~APPROPRIATION~~) (~~GENERAL~~) (SPECIAL) (~~ZONING~~ MAP) ORDINANCE (~~RESOLUTION~~) NO. S-255-85 on the 23rd day of December, 19 85,

ATTEST: Sandra E. Kennedy
SANDRA E. KENNEDY, CITY CLERK

(SEAL)
Mark E. GiaQuinta
PRESIDING OFFICER

Presented by me to the Mayor of the City of Fort Wayne, Indiana, on the 26th day of December, 19 85, at the hour of 3:00 o'clock P.M.,E.S.T.

Sandra E. Kennedy
SANDRA E. KENNEDY, CITY CLERK

Approved and signed by me this 27th day of December, 19 85, at the hour of 3:00 o'clock P.M.,E.S.T.

WIN MOSES, JR., MAYOR

TAB SHEET
BID REFERENCE #1229
PARK DEPARTMENT
BLEACHERS & PICNIC TABLES

COMPANY NAME	10 SETS BLEACHERS	PER EACH OVER 10	80 PICNIC TABLES	100 PICNIC TABLES	PER EACH OVER 80	PER EACH OVER 100
IRON MOUNTAIN FORGE	NO BID	NO BID	$11,620.00	$14,325.00	$145.25	$143.25
KING SCHOOL	$6,755.00	$675.50	$11,495.00	$13,800.00	$143.69	$138.00
R & C FENCE	$7,100.00	$695.00	$14,480.00	$18,000.00	$180.00	$177.00
DUMOR, INC	NO BID	NO BID	$9,156.00	$11,283.00	$114.45	$112.83
SAFEWAY STEEL	$8,200.00	$820.00	NO BID	NO BID	NO BID	NO BID
BLUE VALLEY	NO BID	NO BID	$8,694.40	$10,596.00	$108.00	$105.00
SERVICE SUPPLY	DISQUALIFIED					
MACOTTA	NO BID	NO BID	NO BID	NO BID	NO BID	NO BID
CHILDSCAPES	NO BID	NO BID	NO BID	NO BID	NO BID	NO BID
STURDISTEEL	NO BID	NO BID	NO BID	NO BID	NO BID	NO BID
GLEAVE CONST	NO BID	NO BID	NO BID	NO BID	NO BID	NO BID
JAYFRO	NO BID	NO BID	NO BID	NO BID	NO BID	NO BID
DOUBLET FESTITUBE	DISQUALIFIED					
W. H. PORTER	NO BID	NO BID	NO BID	NO BID	NO BID	NO BID
BELSON	NO BID	NO BID	NO BID	NO BID	NO BID	NO BID

FORM DP2B 5-68

CITY OF FORT WAYNE
DEPARTMENT OF PURCHASES
FT. WAYNE, IND.

Ref. No. 1229

Date October 17, 1985

Date wanted 11/5/85

Fund Appropriation No. _____

INVITATION

Quotations, subject to the conditions on the reverse hereof, are requested on the following list of materials, supplies, equipment or services, for the department as mentioned, with delivery to destination as shown below. Quotations shall include all charges for delivery, packing, etc. Address your reply as indicated below.*

*Mail all replies and correspondence, etc. to Att. of CAROL OFFERLE: 427-1101 DEPARTMENT OF PURCHASES

Address ONE MAIN STREET, ROOM 940, FORT WAYNE, INDIANA 46802

REQUIRED FOR DELIVERY TO:

Department or Division BOARD OF PARK COMMISSIONERS

705 E. STATE BLVD

Address FORT WAYNE, INDIANA 46805

RETURN ORIGINAL TO THE CITY — RETAIN DUPLICATE COPY FOR YOUR FILE

Closing Time of Bids NOVEMBER 5, 1985 AT 10:30 A.M.

TAXES: THE CITY IS EXEMPT FROM FEDERAL EXCISE AND INDIANA STATE SALES TAX. THE CITY'S INDIANA SALES TAX EXEMPTION CERTIFICATE NUMBER IS NO. 34508. PRICES SHOULD NOT INCLUDE THESE TAXES. See "Instructions to Bidders" No. 10 on reverse hereof for details.

TAX EXEMPT (Unless otherwise indicated)

Quantity	Unit	Materials, Supplies, Equipment or Services	Unit Price	Total Amount
		BLEACHERS AND PICNIC TABLES		
		TEN (10) SETS OF FIVE (5) ROW BLEACHERS $_____		
		ALTERNATE BID:		
		COST PER EACH SET OVER TEN (10) SETS $_____		
		EIGHTY (80) HEAVY DUTY PICNIC TABLES $_____		
		ONE HUNDRED (100) HEAVY DUTY PICNIC TABLES $_____		
		ALTERNATE BID:		
		COST PER EACH OVER EIGHTY (80) SETS $_____		
		COST PER EACH OVER ONE HUNDRED (100) SETS $_____		
		No Bid		
		AFFIRMATIVE ACTION: ON FILE _____ ATTACHED _____		

RECEIVED
1985 NOV -7 AM 10:00
PURCHASING

Bid Bond required NO ☐ YES XX 5% Performance Bond NO XX YES ☐ NOT REQUIRED

See instruction item No. 16 on reverse side hereof.

Terms _____% cash discount if paid within _____ days from delivery and acceptance of goods or completion of services.

PROPOSAL OR BID

In compliance with the above invitation for bids and subject to all conditions thereof, the undersigned offers and agrees, if this bid be accepted within a reasonable time from date of closing, to furnish any or all of the items or render such services upon which prices are quoted, in accordance with the specifications applying and at the price set opposite each item.

Delivery of any or all of the items or completion of services indicated shall be made within ___ days from receipt of order

IMPORTANT ☞ As delivery may be a deciding factor in the award of an order, it is important that bidders furnish the information requested above.

Sign Here:

JENNINGS of INDIANA INC.
Name of Company

Per Libby Bean Title Sec.

Address P.O. Box 2129

City Clarksville, IN. 47131 Date 11/5

FORM DP2B 5-68

CITY OF FORT WAYNE
DEPARTMENT OF PURCHASES
FT. WAYNE, IND.

INVITATION

Page 1 of 21

Ref. No. 1229

Date October 17, 1985

Date wanted 11/5/85

Quotations, subject to the conditions on the reverse hereof, are requested on the following list of materials, supplies, equipment or services, for the department as mentioned, with delivery to destination as shown below. Quotations shall include all charges for delivery, packing, etc. Address your reply as indicated below.*

*Mail all replies and correspondence, etc. to Att. of CAROL OFFERLE: 427-1101 DEPARTMENT OF PURCHASES

Address ONE MAIN STREET, ROOM 940, FORT WAYNE, INDIANA 46802

REQUIRED FOR DELIVERY TO:

Department or Division BOARD OF PARK COMMISSIONERS

705 E. STATE BLVD

Address FORT WAYNE, INDIANA 46805

Fund Appropriation No. _____

RETURN ORIGINAL TO THE CITY — RETAIN DUPLICATE COPY FOR YOUR FILE

Closing Time of Bids NOVEMBER 5, 1985 AT 10:30 A.M.

TAXES: THE CITY IS EXEMPT FROM FEDERAL EXCISE AND INDIANA STATE SALES TAX. THE CITY'S INDIANA SALES TAX EXEMPTION CERTIFICATE NUMBER IS NO. 34508. PRICES SHOULD NOT INCLUDE THESE TAXES. See "Instructions to Bidders" No. 10 on reverse hereof for details.

TAX EXEMPT (Unless otherwise indicated)

Quantity	Unit	Materials, Supplies, Equipment or Services	Unit Price	Total Amount
		BLEACHERS AND PICNIC TABLES		
		TEN (10) SETS OF FIVE (5) ROW BLEACHERS (a) $ 652.00	652.00	6,520.(
		ALTERNATE BID:		
		COST PER EACH SET OVER TEN (10) SETS (a) $ 647.00		
		EIGHTY (80) HEAVY DUTY PICNIC TABLES (b) $ 120.00	120.00	9,600.(
		ONE HUNDRED (100) HEAVY DUTY PICNIC TABLES $ 120.00	120.00	12,000.(
		ALTERNATE BID: (b)		
		COST PER EACH OVER EIGHTY (80) SETS (b) $ 120.00		
		COST PER EACH OVER ONE HUNDRED (100) SETS (b) $ 120.00		
		(a) BL515G - Aluminum seat and foot plank - 25 year written warranty on same. 100% Maintenance Free. Hot dipped galvanized understructure (Page 31 - Stadiums Unlimited catalog).		
		(b) #508-610PT as specified - Mexico Forge as per enclosed literature w/galvanized frames.		
		AFFIRMATIVE ACTION: ON FILE _____ ATTACHED X		

Bid Bond required NO ☐ YES XX 5% Performance Bond XX NO ☐ YES NOT REQUIRED

See instruction item No. 16 on reverse side hereof.

Terms NET 30 % cash discount if paid within N/A days from delivery and acceptance of goods or completion of services.

PROPOSAL OR BID

In compliance with the above invitation for bids and subject to all conditions thereof, the undersigned offers and agrees, if this bid be accepted within a reasonable time from date of closing, to furnish any or all of the items or render such services upon which prices are quoted, in accordance with the specifications applying and at the price set opposite each item.

Delivery of any or all of the items or completion of services indicated shall be made within 30-45 days from receipt of order*

IMPORTANT ☞ As delivery may be a deciding factor in the award of an order, it is important that bidders furnish the information requested above.

Sign Here:

SERVICE SUPPLY, LTD.
Name of Company

Per Ben Groves Title President

Address 1524 S. Hamilton Road

City Columbus, Ohio 43227 Date 10/30

SERVICE SUPPLY LTD.

1524 SOUTH HAMILTON ROAD - COLUMBUS, OHIO 43227 - TELEPHONE 614 / 861 - 3681

WRITTEN STATEMENT OF COMPANY POLICY

It is the policy of Service Supply, Ltd. that equal employment opportunity be afforded to all qualified persons without regard to race, religion, color, sex, or national origin.

In support of this policy Service Supply, Ltd. will not discriminate against any employee or applicant for employment because of race, religion, color, sex or national origin.

The Service Supply, Ltd. will take affirmative action to insure that applicants are employed and that employees are treated during employment without regard to race, religion, color, sex or national origin. Such action will include but not be limited to:

RECRUITMENT, ADVERTISING OR SOLICITATION FOR EMPLOYMENT, HIRING, PLACEMENT, UPGRADING, TRANSFER OR DEMOTION. SELECTION FOR TRAINING INCLUDING APPRENTICESHIP, TREATMENT DURING EMPLOYMENT, RATES OF PAY OR OTHER FORMS OF COMPENSATION, LAYOFF OR TERMINATION.

SERVICE SUPPLY, LTD.

Ben Groves President

Signature of Company Official

SERVICE SUPPLY LTD.

1524 SOUTH HAMILTON ROAD - COLUMBUS, OHIO 43227 - TELEPHONE 614 / 861 - 3681

NOTICE TO ALL COMPANY SUPERVISORY
AND ADMINISTRATIVE PERSONNEL

Attached hereto and a part hereof is our Written Statement of Company Policy of Service Supply, Ltd. with respect to equal employment opportunity.

It now becomes part of your responsibility with Service Supply, Ltd. to implement this policy in every way, especially with respect to taking affirmative action as stated in the policy. Accordingly, you are hereby directed to:

A. Post such notices as are prescribed by the Federal or State Laws, City Ordinances and resolutions, and the rules and regulations adopted thereunder together with the applicable orders of the governmental agencies or officers established thereunder.

B. Encourage employment of minority group employees for work in trades where they are not frequently represented. This will be done generally by our main office in hiring but the same shall apply to all job sites. Any applicant for any job should be referred to Mrs. Mary Groves at the main office to assure proper processing of his or her application.

C. Encourage minority group candidates for apprenticeship classes.

Ben Groves President
Signature of Company Official

SERVICE SUPPLY LTD.

1524 SOUTH HAMILTON ROAD - COLUMBUS, OHIO 43227 - TELEPHONE 614 / 861 - 3681

WRITTEN STATEMENT OF COMPANY POLICY

Please be advised that our policy also includes ancestory.

Service Supply, Ltd. is a family oriented business. We have a total of eight employess, all but one employee is related. We do not recruit, if necessary to recruit, sources and all applicants will be advised that we are an equal opportunity employer.

There is no training program at the present, if it becomes necessary, we will make training available.

If an employee feels that he or she has been discriminated against, they should contact Ben Groves, President of Service Supply, Ltd. and he will inform them of any other areas of redress.

Ben Groves

Signature of Company Official

SERVICE SUPPLY LTD.

1524 SOUTH HAMILTON ROAD - COLUMBUS, OHIO 43227 - TELEPHONE 614 / 861 - 3681

WRITTEN STATEMENT OF COMPANY POLICY

Please be advised that our policy includes:

It is the policy of Service Supply, Ltd. to provide equal employment opportunity to all persons without regard to physical or mental handicap. In keeping with the credo of Affirmative Action, the affected classes (minorities, women, etc.) would receive equal consideration for any available employment at Service Supply, Ltd.

We do not recruit, since this is a family oriented business, but if necessary to recruit, we would take affirmative action in our personnel policies and practices for the recruitment, employment development, advancement and consideration of handicapped employees on the basis of the employee's capacity to perform the job applied for and the feasibility of any necessary job accommodation.

Ben Groves President

Signature of Company Official

MBE/WBE STATEMENT

FOR
CITY OF FORT WAYNE, INDIANA

BID NO. 1229
BID DATE: 11/5/85

The City is committed to minority/women's business participation, and the Citizens' Advisory Committee is presently preparing an ordinance concerning minority and women's business participation for City contracts. This project is also governed by various affirmative action requirements including Presidential Executive Order Number 11246. To assist the City in meeting its stated goals and to further meet affirmative action requirements, the undersigned commits _____percent (____%), as a goal, of the undersigned's total bid to minority/women's business participation. In that regard, the following MBE and/or WBE firms have been contacted to work as subcontractors:

Name of Firm	Type of Work
1.	
2.	
3.	
4.	

Submitted on: October 30, 1984

By Service Supply Ltd
(Company Name)

Ben Groves, President
(Name & Title of Person Authorized to sign)

Business Address: _____

_____

_____

Phone Number: _____

SEE ATTACHED LETTER ON OUR COMPANY POLICY.

SERVICE SUPPLY LTD.

1524 SOUTH HAMILTON ROAD - COLUMBUS, OHIO 43227 - TELEPHONE 614 / 861 - 3681

October 30, 1985

WE ARE ENCLOSING COPIES OF SERVICE SUPPLY, LTD.'S COMPANY POLICY. SERVICE SUPPLY, LTD. IS A FAMILY ORIENTED BUSINESS EMPLOYING A TOTAL OF EIGHT (8) PERSONS. WE HAVE BEEN IN BUSINESS FOR TWENTY-SIX YEARS. ALL BUT ONE EMPLOYEE IS RELATED. (SEE BELOW)

SERVICE SUPPLY, LTD.

Ben Groves

Ben Groves
President

BG/bh

CURRENT EMPLOYMENT DATA		MALE	FEMALE	TOTAL
Officials, Managers and Supervisors		1	1	2
Sales Workers		2		2
Office & Clerical -	2 Full Time		2	
	2 Part Time		2	4
	TOTAL	3	5	8

FORM DP2B 5-68

CITY OF FORT WAYNE
DEPARTMENT OF PURCHASES
FT. WAYNE, IND.

INVITATION

Quotations, subject to the conditions on the reverse hereof, are requested on the following list of materials, supplies, equipment or services, for the department as mentioned, with delivery to destination as shown below. Quotations shall include all charges for delivery, packing, etc. Address your reply as indicated below.*

Ref. No. 1229

Date October 17, 1985

Date wanted 11/5/85

Fund Appropriation No. _____

*Mail all replies and correspondence, etc. to Att. of CAROL OFFERLE: 427-1101 DEPARTMENT OF PURCHASES

Address ONE MAIN STREET, ROOM 940, FORT WAYNE, INDIANA 46802

REQUIRED FOR DELIVERY TO:

Department or Division BOARD OF PARK COMMISSIONERS
705 E. STATE BLVD

Address FORT WAYNE, INDIANA 46805

RETURN ORIGINAL TO THE CITY — RETAIN DUPLICATE COPY FOR YOUR FILE

Closing Time of Bids NOVEMBER 5, 1985 AT 10:30 A.M.

TAXES: THE CITY IS EXEMPT FROM FEDERAL EXCISE AND INDIANA STATE SALES TAX. THE CITY'S INDIANA SALES TAX EXEMPTION CERTIFICATE NUMBER IS NO. 34508. PRICES SHOULD NOT INCLUDE THESE TAXES. See "Instructions to Bidders" No. 10 on reverse hereof for details.

TAX EXEMPT (Unless otherwise indicated)

Quantity	Unit	Materials, Supplies, Equipment or Services		Unit Price	Total Amount
		BLEACHERS AND PICNIC TABLES			
		TEN (10) SETS OF FIVE (5) ROW BLEACHERS	$ NO BID		NO BID
		ALTERNATE BID:			
		COST PER EACH SET OVER TEN (10) SETS	$ NO BID		NO BID
		EIGHTY (80) HEAVY DUTY PICNIC TABLES	$ 145.25 each*	145.25	$11,620.00
		ONE HUNDRED (100) HEAVY DUTY PICNIC TABLES	$ 143.25 each*	143.25	14,325.00
		ALTERNATE BID:			
		COST PER EACH OVER EIGHTY (80) SETS	$ 145.25 each*		
		COST PER EACH OVER ONE HUNDRED (100) SETS	$ 143.25 each*		
		*BIDDING IRON MOUNTAIN FORGE MODEL 238-6GT PICNIC TABLE (See specifications in the enclosed catalog, pages 4 & 5.)			
		F.O.B. DESTINATION			
		PLEASE SEND BID TABULATION			
		AFFIRMATIVE ACTION: ON FILE _____ ATTACHED _____ TO BE COMPLETED UPON AWARD OF BID.			

Bid Bond required NO ☐ YES XX 5% Performance Bond XX NO ☐ YES NOT REQUIRED

See instruction No. 16 on reverse side hereof.

Terms Net 30 % cash discount if paid within _____ days from delivery and acceptance of goods or completion of services.

PROPOSAL OR BID

In compliance with the above invitation for bids and subject to all conditions thereof, the undersigned offers and agrees, if this bid be accepted within a reasonable time from date of closing, to furnish any or all of the items or render such services upon which prices are quoted, in accordance with the specifications applying and at the price set opposite each item.

Delivery of any or all of the items or completion of services indicated shall be made within 30 days from receipt of order.

IMPORTANT ☞ As delivery may be a deciding factor in the award of an order, it is important that bidders furnish the information requested above.

Sign Here:

IRON MOUNTAIN FORGE
Name of Company

Per Linda Ragsdale Title Linda Ragsdale
Sales Coordinat

Address P.O. Box 897

City Farmington, MO 63640 Date 11-4-85

MBE/WBE STATEMENT

FOR
CITY OF FORT WAYNE, INDIANA

BID NO. 1229
BID DATE: 11/5/85

The City is committed to minority/women's business participation, and the Citizens' Advisory Committee is presently preparing an ordinance concerning minority and women's business participation for City contracts. This project is also governed by various affirmative action requirements including Presidential Executive Order Number 11246. To assist the City in meeting its stated goals and to further meet affirmative action requirements, the undersigned commits _____percent (_____%), as a goal, of the undersigned's total bid to minority/women's business participation. In that regard, the following MBE and/or WBE firms have been contacted to work as subcontractors:

	Name of Firm	Type of Work
1.	N/A	
2.		
3.		
4.		

Submitted on: _____, 1984

By _____
(Company Name)

_____
(Name & Title of Person Authorized to sign)

Business Address: _____

_____

_____

Phone Number: _____

FORM DP2B 5-68

CITY OF FORT WAYNE
DEPARTMENT OF PURCHASES
FT. WAYNE, IND.

INVITATION

Page 1 of 21

Ref. No. 1229

Date October 17, 1985

Date wanted 11/5/85

Quotations, subject to the conditions on the reverse hereof, are requested on the following list of materials, supplies, equipment or services, for the department as mentioned, with delivery to destination as shown below. Quotations shall include all charges for delivery, packing, etc. Address your reply as indicated below.*

*Mail all replies and correspondence, etc. to Att. of CAROL OFFERLE: 427-1101 DEPARTMENT OF PURCHASES

Address ONE MAIN STREET, ROOM 940, FORT WAYNE, INDIANA 46802

REQUIRED FOR DELIVERY TO:

Department or Division BOARD OF PARK COMMISSIONERS
705 E. STATE BLVD

Address FORT WAYNE, INDIANA 46805

Fund Appropriation No. _____

RETURN ORIGINAL TO THE CITY — RETAIN DUPLICATE COPY FOR YOUR FILE

Closing Time of Bids NOVEMBER 5, 1985 AT 10:30 A.M.

TAXES: THE CITY IS EXEMPT FROM FEDERAL EXCISE AND INDIANA STATE SALES TAX. THE CITY'S INDIANA SALES TAX EXEMPTION CERTIFICATE NUMBER IS NO. 34508. PRICES SHOULD NOT INCLUDE THESE TAXES. See "Instructions to Bidders" No. 10 on reverse hereof for details.

TAX EXEMPT (Unless otherwise indicated)

Quantity	Unit	Materials, Supplies, Equipment or Services	Unit Price	Total Amount
		BLEACHERS AND PICNIC TABLES		
		TEN (10) SETS OF FIVE (5) ROW BLEACHERS $ 6,755.00		
		ALTERNATE BID:		
		COST PER EACH SET OVER TEN (10) SETS $ 675.50		
		EIGHTY (80) HEAVY DUTY PICNIC TABLES $ 11,495.00		
		ONE HUNDRED (100) HEAVY DUTY PICNIC TABLES $ 13,800.00		
		ALTERNATE BID:		
		COST PER EACH OVER EIGHTY (80) SETS $ 143.69		
		COST PER EACH OVER ONE HUNDRED (100) SETS $ 138.00		
		EXCEPTIONS: Bleachers will use weathering steel understructure with aluminum seats and footboards in lieu of monocoat and galvanized steel as specified.		
		NOTE: Picnic tables are per plans and specifications. All equipment as manufactured by E& D Specialty Stands of North Collins, N.Y.		
		AFFIRMATIVE ACTION: ON FILE _____ ATTACHED Yes		

Bid Bond required NO ☐ YES XX 5% Performance Bond NO XX YES ☐ NOT REQUIRED

See instruction item No. 16 on reverse side hereof.

Terms _____% cash discount if paid within _____ days from delivery and acceptance of goods or completion of services.

TERMS: NET 30 DAYS

PROPOSAL OR BID

In compliance with the above invitation for bids and subject to all conditions thereof, the undersigned offers and agrees, if this bid be accepted within a reasonable time from date of closing, to furnish any or all of the items or render such services upon which prices are quoted, in accordance with the specifications applying and at the price set opposite each item.

Delivery of any or all of the items or completion of services indicated shall be made within 60 days from receipt of order*

IMPORTANT ☞ As delivery may be a deciding factor in the award of an order, it is important that bidders furnish the information requested above.

Sign Here:

KING SCHOOL EQUIP.CO., INC., RAYMOND J.KING AND CARRIE M.KING
A JOINT VENTURE
Name of Company

Per Raymond J. King Title PRESIDENT

Address P.O. Box 348, 3055 E. Main St.

City Danville, IN 46122 Date 11-5-85

RIDER NO. 1

AFFIRMATIVE ACTION CLAUSE

Each contractor whose contract with the Board exceeds $2,500.00, and his subcontractors, shall include the following Affirmative Action Clause in each of their contracts or subcontracts (and modifications, renewals, or extensions thereof if not included in the original contract).

AFFIRMATIVE ACTION COMMITMENT

(a) The Contractor will not discriminate against any employee or applicant for employment because of race, color, sex, religion, national origin, or physical or mental handicap in regard to any position for which the employee or applicant for employment is qualified.

The Contractor agrees to take affirmative action to employ, advance in employment, and otherwise treat qualified individuals without discrimination based upon their race, color, sex, religion, national origin, or their physical or mental handicap in all employment practices such as the following: employment, upgrading, demotion or transfer, recruitment, advertising, layoff or termination, rates of pay or other compensation, and selection for training, including apprenticeship.

(b) In the event of the Contractor's noncompliance with the requirements of this clause, actions for noncompliance may be taken in accordance with the rules and regulations of the Board.

(c) The Contractor agrees to post in conspicuous places, available to employees and applicants for employment, notices in ■ form to be prescribed by the Business Manager. Such notices shall state the Contractor's obligation to take affirmative action to employ and advance in employment qualified employees and applicants for employment without regard to race, color, sex, religion, national origin, or physical or mental handicap, and shall also set forth the rights of applicants and employees.

(d) The Contractor will notify each labor union or representative of workers with which it has a collective bargaining agreement or other contract understanding that the Contractor is bound by the terms of this clause and is committed to take affirmative action to employ and advance in employment individuals without regard to race, color, sex, religion, national origin, or physical or mental handicap.

(e) The Contractor will include the provisions of this clause in every subcontract or purchase order of two thousand five hundred dollars ($2,500.00) or more, so that such provisions will be binding upon each subcontractor or vendor. The Contractor will take such action with respect to any subcontract or purchase order as the Business Manager may direct to enforce such provisions, including actions for noncompliance.

KING SCHOOL EQUIPMENT CO.,INC.	David L. Kisner	Nov. 5, 1985
(Company Name)	(Signature of Representative)	(Date)

Every contractor or subcontractor holding a contract of Twenty Thousand Dollars ($20,000) or more and having 20 or more employees shall prepare and maintain an Affirmative Action Program at each establishment which shall set forth the Contractor's policies, practices and procedures, in accordance with Resolution No. 7105 of the Board of School Commissioners of the City of Indianapolis. A copy of the Affirmative Action Program shall be filed with the Business Manager, either immediately upon execution of the contract, if one is already prepared, or within thirty (30) days following execution of the contract, if one is not fully prepared. (Copies of the Resolution may be obtained from the Office of the Board Secretary).

FORM DP2B 5-68

CITY OF FORT WAYNE
DEPARTMENT OF PURCHASES
FT. WAYNE, IND.

INVITATION

Ref. No. 1229

Date October 17, 1985

Date wanted 11/5/85

Quotations, subject to the conditions on the reverse hereof, are requested on the following list of materials, supplies, equipment or services, for the department as mentioned, with delivery to destination as shown below. Quotations shall include all charges for delivery, packing, etc. Address your reply as indicated below.*

*Mail all replies and correspondence, etc. to Att. of CAROL OFFERLE: 427-1101 DEPARTMENT OF PURCHASES

Address ONE MAIN STREET, ROOM 940, FORT WAYNE, INDIANA 46802

REQUIRED FOR DELIVERY TO:

Department or Division BOARD OF PARK COMMISSIONERS
705 E. STATE BLVD

Address FORT WAYNE, INDIANA 46805

Fund Appropriation No. _____

RETURN ORIGINAL TO THE CITY — RETAIN DUPLICATE COPY FOR YOUR FILE

Closing Time of Bids NOVEMBER 5, 1985 AT 10:30 A.M.

TAXES: THE CITY IS EXEMPT FROM FEDERAL EXCISE AND INDIANA STATE SALES TAX. THE CITY'S INDIANA SALES TAX EXEMPTION CERTIFICATE NUMBER IS NO. 34508. PRICES SHOULD NOT INCLUDE THESE TAXES. See "Instructions to Bidders" No. 10 on reverse hereof for details.

TAX EXEMPT (Unless otherwise indicated)

Quantity	Unit	Materials, Supplies, Equipment or Services	Unit Price	Total Amount
		BLEACHERS AND PICNIC TABLES		
		TEN (10) SETS OF FIVE (5) ROW BLEACHERS $ 7,100.00		
		ALTERNATE BID:		
		COST PER EACH SET OVER TEN (10) SETS $ 695.00		
		EIGHTY (80) HEAVY DUTY PICNIC TABLES $ 181.00		
		ONE HUNDRED (100) HEAVY DUTY PICNIC TABLES $ 180.00		
		ALTERNATE BID:		
		COST PER EACH OVER EIGHTY (80) SETS $ 180.00		
		COST PER EACH OVER ONE HUNDRED (100) SETS $ 177.00		
		NOTE: Picnic tables are by Wabash Valley Mfg., Inc. See information attached.		
		AFFIRMATIVE ACTION: ON FILE X ATTACHED _____		

Bid Bond required NO ☐ YES XX 5% Performance Bond NO XX YES ☐ NOT REQUIRED

See instruction item No. 16 on reverse side hereof.

Terms _____% cash discount if paid within _____ days from delivery and acceptance of goods or completion of services.

PROPOSAL OR BID

In compliance with the above invitation for bids and subject to all conditions thereof, the undersigned offers and agrees, if this bid be accepted within a reasonable time from date of closing, to furnish any or all of the items or render such services upon which prices are quoted, in accordance with the specifications applying and at the price set opposite each item.

Delivery of any or all of the items or completion of services indicated shall be made within 60 days from receipt of order

IMPORTANT ☞ As delivery may be a deciding factor in the award of an order, it is important that bidders furnish the information requested above.

Sign Here: Donald W Roop

R & C Fence, Inc.
Name of Company

Per Donald W. Roop Title President

Address 4822 Avondale Dr.

City Ft. Wayne, IN Date 11-5-85

5 ROW 15' ALL METAL BLEACHER

MODEL NO.
MIRACOTE FRAME 1045
GALVANIZED FRAME 1045-1

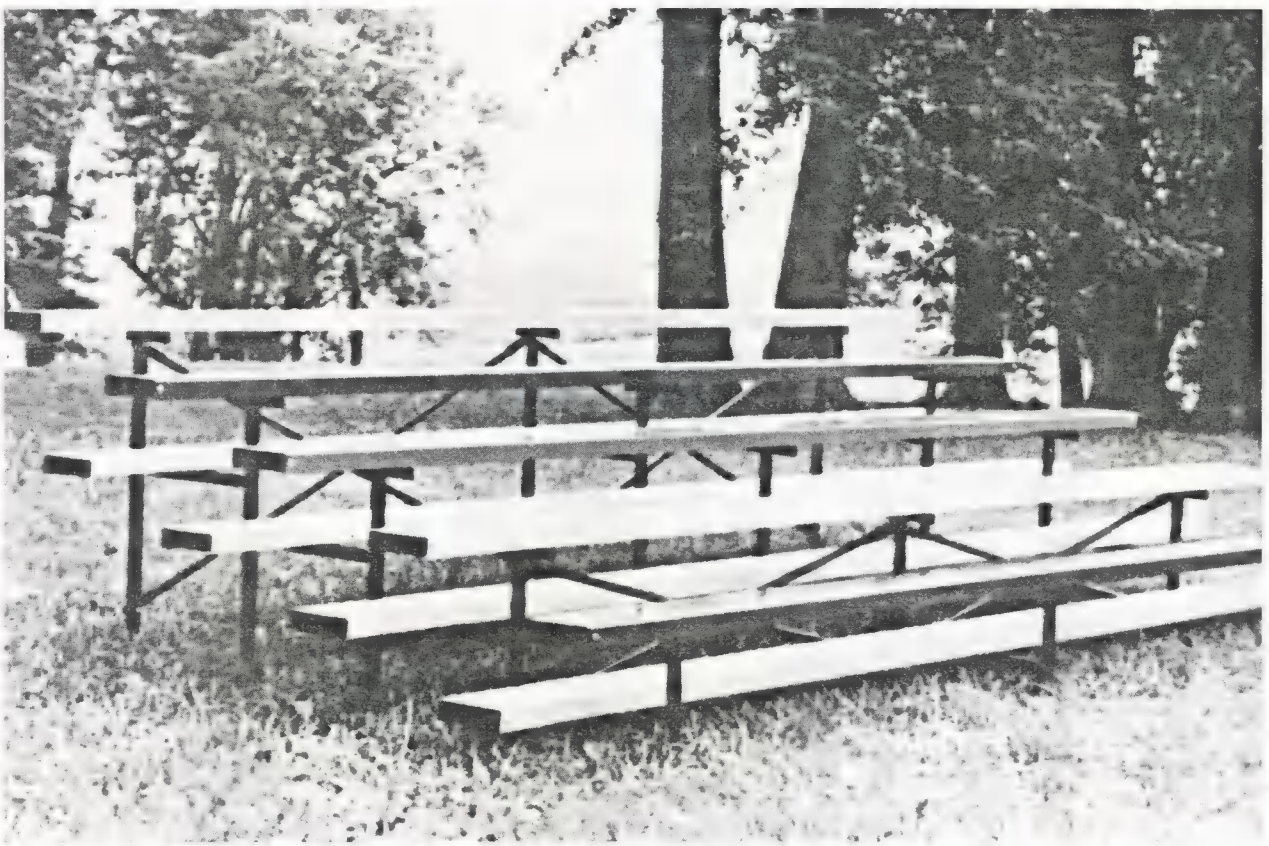

MIRACLE & JAMISON

RECREATION EQUIPMENT COMPANY

Grinnell, Iowa ▪ 50112 ▪ 515•236-7536
TWX 910—520-2826

SPECIFICATIONS

5 ROW X 15'0" ALL METAL
NON-ELEVATED BLEACHERS
MODELS 1045 AND 1045-1
JANUARY 1981 EDITION

PART I - GENERAL:

A. DESCRIPTION:

1. A FIVE (5) ROW BY 15'0" ALL METAL BLEACHER DESIGNED TO SUPPORT, IN ADDITION TO ITS OWN WEIGHT, A UNIFORMLY DISTRIBUTED LIVE LOAD OF NOT LESS THAN 100 PSF. OF GROSS HORIZONTAL PROJECTION OF THE GRANDSTAND. ALL SEATS AND FOOTBOARD MEMBERS SHALL BE DESIGNED FOR LIVE LOADS OF NOT LESS THAN 120 POUNDS PER LINEAR FOOT.

   SHALL BE DESIGNED TO RESIST, WITH OR WITHOUT LIVE LOAD, A HORIZONTAL WIND LOAD OF 30 PSF. OF ALL VERTICAL PROJECTIONS OF THE STANDS.

   THE BLEACHER SHALL BE DESIGNED TO RESIST A HORIZONTAL SWAYING FORCE APPLIED TO THE SEATS IN A DIRECTION PARALLEL TO THE LENGTH OF THE SEATS, OF 24 POUNDS PER LINEAR FOOT OF SEATS, AND IN A DIRECTION PERPENDICULAR TO THE LENGTH OF THE SEATS, OF 10 POUNDS PER LINEAR FOOT OF SEATS.

2. MODEL 1045 FRAMEWORK SHALL HAVE A MIRACOTE FINISH.

3. MODEL 1045-1 FRAMEWORK SHALL HAVE A HOT DIP GALVANIZED FINISH.

B. SHIPPING WEIGHT:

1. 765 POUNDS — 347 KILOS

C. GROUND SPACE REQUIRED:

1. 9' X 15' — 2.74 METERS X 4.57 METERS

PART II MATERIALS, PRODUCTS:

A. FRAMEWORK:

1. MODEL 1045 FRAMEWORK SHALL BE 1-3/4" X 1-3/4" X 3/16" STEEL ANGLE WITH THE EXCEPTION OF THE BOTTOM RUNNER WHICH SHALL BE 1-1/2" X 1-1/2" X 1/8" STEEL ANGLE. FINISH SHALL BE MIRACOTE BLACK. SEE FINISH SECTION.

2. MODEL 1045-1 FRAMEWORK SHALL BE FABRICATED OF THE SAME STEEL ANGLE AS MODEL 1045. FINISH SHALL BE HOT DIP GALVANIZED AFTER FABRICATION. SEE FINISH SECTION.

5 ROW X 15'0" ALL METAL
NON-ELEVATED BLEACHERS
MODELS 1045 AND 1045-1

PART II MATERIALS, PRODUCTS CON'T

B. CROSS BRACES:

1. MODEL 1045 BRACES SHALL BE 1-1/2" X 1-1/2" X 1/8" STEEL ANGLE WITH A BLACK MIRACOTE FINISH.

2. MODEL 1045-1 BRACES SHALL BE THE SAME MATERIAL WITH A HOT DIP GALVANIZED FINISH.

C. SEAT BOARDS:

1. SEAT BOARDS SHALL BE FABRICATED OF 16 GAUGE GALVANEAL SHEET STEEL FORMED INTO A 2" HIGH BY 9-1/8" WIDE STRUCTURAL CHANNEL, 15'0" LONG. END CAPS OF 18 GAUGE STEEL. THE OUTSIDE SURFACES OF THE SEAT BOARDS SHALL BE FINISHED IN MIRACOTE. MULTI COLORED SEAT BOARDS WILL BE PROVIDED UNLESS OTHERWISE SPECIFIED.

D. FOOT BOARDS:

1. SHALL BE FABRICATED OF 16 GAUGE GALVANIZED STEEL WITH DIMPLED NON-SKID TREAD SURFACE, FORMED INTO A 2" HIGH BY 9-5/8" WIDE STRUCTURAL CHANNEL 15'0" LONG. GALVANIZED STEEL END CAPS INCLUDED.

E. FINISH:

1. FRAMEWORK AND CROSS BRACES FOR MODEL 1045 SHALL BE FINISHED IN BLACK MIRACOTE.

2. SEAT BOARDS SHALL BE FINISHED IN MIRACOTE ON THE OUTSIDE SURFACES. STANDARD COLORS SHALL BE RED, DARK BLUE, GOLD, WHITE AND GREEN.

MIRACOTE FINISH IS AN ACRYLIC POWDER RESIN FUSED TO THE METAL WITH A MINIMUM THICKNESS OF 3 TO 5 MILS. THE COATING SHALL WITHSTAND A MINIMUM OF 60 INCH POUNDS, DIRECT IMPACT.

3. FRAMEWORK AND CROSS BRACES FOR MODEL 1045-1 SHALL BE HOT DIP GALVANIZED AFTER FABRICATION. ALL GALVANIZING SHALL BE APPLIED ACCORDING TO ASTM SPECIFICATION A-123-73.

4. FOOT BOARDS SHALL BE GALVANIZED.

5. ALL HARDWARE SHALL BE ZINC IRIDITE PLATED.

F. GUARANTEE:

1. MIRACLE GUARANTEES ALL MATERIALS AND WORKMANSHIP FOR ONE (1) YEAR, BUT WILL NOT ACCEPT ANY RESPONSIBILITY FOR VANDALISM. ANY CLAIM FILED MUST BE DONE SO WITHIN

PART II MATERIALS, PRODUCTS CON'T

ONE YEAR OF THE INVOICE DATE AND MUST INCLUDE A COPY OF THE INVOICE, ACKNOWLEDGEMENT OR ORDER NUMBER.

PART III - INSTALLATION:

STEP 1. PLACE THE THREE 5-ROW FRAMES 6'0" APART.

NOTE: AS PARTS ARE ASSEMBLED, DO NOT TIGHTEN BOLTS COMPLETELY UNTIL ALL COMPONENTS ARE INSTALLED. THIS WILL MAKE TOTAL ASSEMBLY EASIER.

STEP 2. SELECT THE FOUR 82-3/4" BRACES AND X BRACE FRAMES AT ROW 5 USING 7/16" HEX HEAD BOLTS AND NUTS.

STEP 3. USING THE FOUR 77-1/4" BRACES, X BRACE FRAMES AT ROW 3, USING SAME BOLTING PROCEDURE AS STEP 2.

STEP 4. PLACE THE FOOTBOARDS INTO PLACE AND SECURE WITH 5/16" CARRIAGE BOLTS, WASHERS AND NUTS. SEE DIAGRAM.

STEP 5. PLACE SEAT PLANKS ON THE FRAMES MAKING SURE EACH SEAT PLANK IS PROPERLY ALIGNED. SECURE TO FRAME WITH 5/16" CARRIAGE BOLTS, WASHERS AND NUTS. SEE DIAGRAM.

STEP 6. PLUMB, LEVEL AND TIGHTEN ALL BOLTS.

STEP 7. SELECT THE 10 METAL SEAT BOARD END CAPS. INSERT END CAPS IN OPEN ENDS OF METAL SEAT PLANKS, AND SECURE IN THE PRE-DRILLED HOLES WITH 1/4" CARRIAGE BOLTS, WASHERS AND NUTS - 2 PER END CAP.

STEP 8. INSTALL THE 8 METAL END CAPS IN THE OPEN FOOTBOARD ENDS. FASTEN IN PRE-DRILLED HOLES WITH 1/4" CARRIAGE BOLTS, WASHERS AND NUTS - 2 PER END CAP.

INSTALLATION DRAWING

X BRACING DETAIL

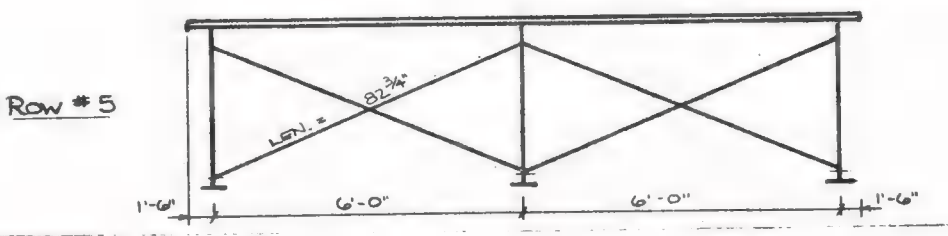

INSTALLATION DRAWING

CROSS FRAMING DETAILS - ROWS 1 THRU 5

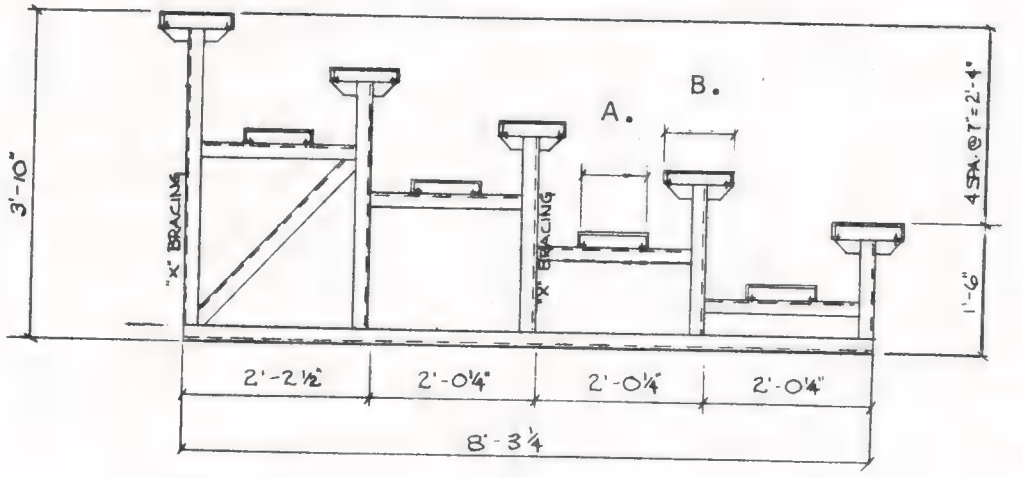

CROSS SECTION THRU 5 ROW BLEACHER - MODEL 1045

A.

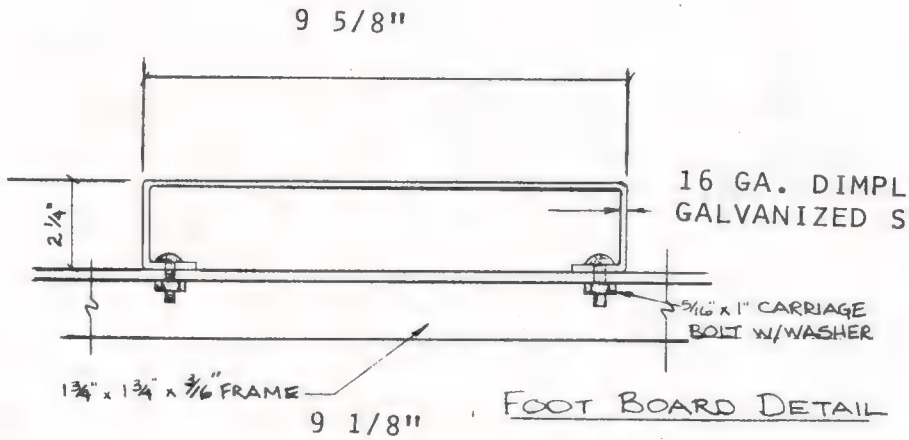

FOOT BOARD DETAIL

B.

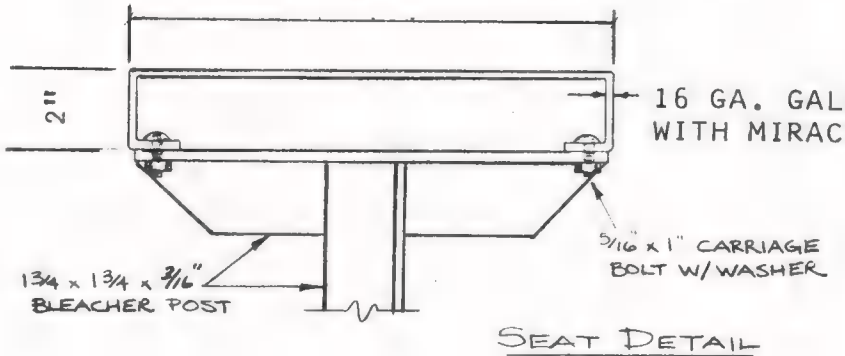

SEAT DETAIL

BILL OF MATERIAL

5 ROW X 15' BLEACHERS

MODELS 1045 AND 1045-1

REF	DESCRIPTION	MIRACOTE 1045	GALV. 1045-1	QTY.
1	5 - ROW FRAME 1-3/4" X 1-3/4" X 3/16" ANGLE	850-411	850-669	3
2	77-1/4" BRACE	850-408	850-666	4
3	82-3/4" BRACE	850-409	850-667	4
4	MIRACOTED METAL SEAT BOARDS	850-412	850-412	5
5	DIMPLED TREAD STEEL FOOTBOARDS	851-787	851-787	4
6	PARTS CARTON	850-416	850-416	1

PARTS CARTON

	PARTS CARTON CONTENTS	PART NO.	QTY.	
	7/16" X 1" HEX HEAD BOLTS	104-102	12	
	7/16" NUTS	110-050	12	
	5/16" X 1" CARRIAGE BOLTS	104-012	54	
	5/16" WASHERS	117-003	54	
	5/16" NUTS	110-021	54	
	1/4" X 3/4" CARRIAGE BOLTS	104-005	36	
	1/4" WASHERS	117-001	36	
	1/4" NUTS	110-010	36	
	METAL END CAPS FOR SEAT BOARDS (BLACK)	850-675	10	
	METAL END CAPS FOR FOOT BOARDS (GALV.)	850-691	8	

BROCHURE 100

GENERAL SAFETY, INSTALLATION, AND MAINTENANCE RECOMMENDATIONS APPLYING TO PLAYGROUND, ATHLETIC FIELD, RECREATION AND SIMILAR EQUIPMENT.

SURFACE:

THERE ARE SEVERAL SURFACES THAT THE EQUIPMENT MUST BE INSTALLED OVER. LISTED IN ORDER OF PROTECTIVE QUALITIES, THEY ARE:

1. PEA GRAVEL
2. LOOSE SAND
3. SHAVINGS, BARK OR A LIKE MATERIAL

TURF, UNDISTURBED NATURAL GROUND, DECOMPOSED GRANITE, BLACK TOP OR CONCRETE SURFACES ARE TOTALLY UNACCEPTABLE. WE RECOMMEND 12" OF PROTECTIVE CUSHIONING MATERIAL AROUND AND UNDER ALL PLAYGROUND EQUIPMENT TO HELP PREVENT INJURIES IN CASE OF ACCIDENTAL FALL.

FASTENERS:

ORDINARILY IT IS PREFERABLE TO FULLY ERECT THE EQUIPMENT BEFORE TIGHTENING THE FASTENERS. THIS SPEEDS ASSEMBLY, PROVIDES AN OPPORTUNITY TO BETTER ALIGN AND CHECK THAT ALL FASTENERS ARE TIGHT. ON OCCASION, FASTENERS WILL BE PROVIDED THAT ARE LONGER THAN NEEDED WHEN COMPLETELY TIGHT. THIS IS ONLY TO ASSIST WITH ASSEMBLY. BOLT THREADS THAT PROTRUDE AFTER FINAL TIGHTENING MAY BE A HAZARD AND SHOULD BE REMOVED AS PART OF NORMAL INSTALLATION. BOLT CUTTERS OR A SAW WILL REMOVE THESE PROTRUSIONS; THE CUTS SHOULD BE PEENED OR FILED IF SHARP EDGES REMAIN. SET SCREWS MUST BE TIGHT! TIGHTEN THEM AS MUCH BY HAND AS YOU CAN, THEN DRIVE THE WRENCH A FULL TURN WITH A HAMMER.

POST INSTALLATION INSPECTION:

IT IS VERY COMMON FOR NEW EQUIPMENT OF ANY KIND TO RECEIVE VERY HEAVY USE DURING THE FIRST FEW DAYS. FOLLOW UP WITH INSPECTION AND CORRECTION, IF NEED BE, WITHIN THE FIRST WEEK. PERHAPS A FASTENER WAS MISSED OR NOT TIGHTENED. POSSIBLY THE EQUIPMENT WAS SHAKEN BEFORE THE CONCRETE HAD HARDENED. FOLLOW UP IS IMPORTANT!

PERIODIC INSPECTION:

ALL EQUIPMENT SHOULD BE REGULARLY INSPECTED. THE FOLLOWING ITEMS SHOULD BE CAREFULLY CHECKED: "S" HOOKS FREE OF WEAR AND CLOSED METAL TO METAL; SWING SEATS IN GOOD CONDITION AND HANGING PROPERLY; ALL FASTENERS IN PLACE AND TIGHT; EXPOSED THREADS REMOVED, AND GENERAL INSPECTION FOR SIGNS OF WEAR, MISSING PARTS, ETC.

GROUND HAZARDS:

IN THE COURSE OF PLAY, IT IS COMMON THAT HOLES DEVELOP IN THE PLAYGROUND SURFACE, ESPECIALLY UNDER SWINGS, AT THE FOOT OF SLIDES, AROUND MERRY-GO-ROUNDS, ETC. THESE SHOULD BE FILLED AND THERE SHOULD BE NO EXPOSED CONCRETE FOOTINGS TO TRIP OVER OR FALL INTO. SEE FOOTING RECOMMENDATIONS IN THE SPECIFICATION SHEET.

PLAYGROUND PLANNING:

PART OF THIS SERVICE IS INTENDED AS A GUIDE TO PREVENT ONE PIECE OF EQUIPMENT FROM INTERFERING WITH ANOTHER. SOME PLAY AREAS ARE RESTRICTED AND GOOD ARRANGEMENT MAY BE THE ANSWER.

IF WE CAN HELP, DIRECT YOUR INQUIRY TO:

PLAYGROUND PLANNING
MIRACLE RECREATION EQUIPMENT COMPANY
P.O. BOX 275
GRINNELL, IOWA 50112

FOR SPECIFIC STEP BY STEP INSTRUCTIONS, SEE THE SPECIFICATIONS AND INSTALLATION INSTRUCTIONS WITH EACH UNIT. NORMALLY IN THE PARTS CARTON BUT IF OMITTED, WRITE OR CALL MIRACLE'S SHIPPING DEPARTMENT.

SPECIFICATIONS FOR WABASH VALLEY PICNIC TABLE

A. LEG SUPPORTS: Shall be fabricated of 2-3/8" O.D. galvanized structural steel tubing.

B. DIAGONAL BRACES: Shall be fabricated of 1¼" O.D. x 13 ga. steel tubing.

C. TOP & SEAT SUPPORTS: 3/16" x 1½" steel.

D. TOP & SEATS: 3/4" x 9 gauge expanded steel mesh framed in die formed 3/4" x 1½ x 14 ga. angle & plastisol coated to a minimum 150 mil wrap

E. FINISH: Frames shall be of a galvanized finish, primed and overcoated with approximately 12-15 mils of P.V.C.

F. STANDARDS: Frame finish to pass A.S.T.M. (American Society for testing and materials) Designation B117-73 (Reapproved 1979) Salt spray (fog) testing 2500 hours - no effect. This method has been approved for use by agencies of the Department of Defense to replace method 811.1 of Federal Test Method Standard No. 151b and for listing in DOD Index of Specifications and Standards.

Tops and seats to pass A.S.T.M. designation: D1499-64 (reapproved 1977) operating light and water exposure apparatus (carbon-arc type) for exposure of plastics. 2500 hrs. - no effect. Approved for use by agencies of the Dept. of Defense.

G. HARDWARE: 5/16" diameter and plated

H. MEASUREMENTS: Top: 27" high, 30" wide, 6 ft. long.

Seats: 17" high, 10¼" wide, 6 ft. long.

I. WARRANTY: Plastisol-coated tops and seats carry a twenty-five (25) year guarantee against rust, chipping and peeling. (vandalism is excluded)

FORM DP2B 5-68

CITY OF FORT WAYNE
DEPARTMENT OF PURCHASES
FT. WAYNE, IND.

INVITATION

Quotations, subject to the conditions on the reverse hereof, are requested on the following list of materials, supplies, equipment or services, for the department as mentioned, with delivery to destination as shown below. Quotations shall include all charges for delivery, packing, etc. Address your reply as indicated below.*

Ref. No. 1229

Date October 17, 1985

Date wanted 11/5/85

*Mail all replies and correspondence, etc. to Att. of CAROL OFFERLE: 427-1101 DEPARTMENT OF PURCHASES

Address ONE MAIN STREET, ROOM 940, FORT WAYNE, INDIANA 46802

REQUIRED FOR DELIVERY TO:

Department or Division BOARD OF PARK COMMISSIONERS
705 E. STATE BLVD

Address FORT WAYNE, INDIANA 46805

Fund Appropriation No. _____

RETURN ORIGINAL TO THE CITY — RETAIN DUPLICATE COPY FOR YOUR FILE

Closing Time of Bids NOVEMBER 5, 1985 AT 10:30 A.M.

TAXES: THE CITY IS EXEMPT FROM FEDERAL EXCISE AND INDIANA STATE SALES TAX. THE CITY'S INDIANA SALES TAX EXEMPTION CERTIFICATE NUMBER IS NO. 34608. PRICES SHOULD NOT INCLUDE THESE TAXES. See "Instructions to Bidders" No. 10 on reverse hereof for details.

TAX EXEMPT (Unless otherwise indicated)

Quantity	Unit	Materials, Supplies, Equipment or Services		Unit Price	Total Amount
		BLEACHERS AND PICNIC TABLES			
		TEN (10) SETS OF FIVE (5) ROW BLEACHERS	$_____	NO	BID
		ALTERNATE BID:			
		COST PER EACH SET OVER TEN (10) SETS	$_____	NO	BID
		EIGHTY (80) HEAVY DUTY PICNIC TABLES	$_____	114.45	$ 9,156.00
		ONE HUNDRED (100) HEAVY DUTY PICNIC TABLES	$_____	112.83	11,283.00
		ALTERNATE BID:			
		COST PER EACH OVER EIGHTY (80) SETS	$ 114.45		
		COST PER EACH OVER ONE HUNDRED (100) SETS	$ 112.83		
		NOTE			
		WE ARE OFFERING THE DuMOR NO. 60-195-0P PICNIC TABLE. A COPY OF THIS DRAWING ALONG WITH A COPY OF OUR BROCHURE AND PRICE LIST ARE ATTACHED.			
		AFFIRMATIVE ACTION: ON FILE _____ ATTACHED X			

Bid Bond required NO ☐ YES XX 5% Performance Bond NO XX YES ☐ NOT REQUIRED

See instruction item No. 16 on reverse side hereof.

Terms NET % cash discount if paid within 30 days from delivery and acceptance of goods or completion of services.

PROPOSAL OR BID

In compliance with the above invitation for bids and subject to all conditions thereof, the undersigned offers and agrees, if this bid be accepted within a reasonable time from date of closing, to furnish any or all of the items or render such services upon which prices are quoted, in accordance with the specifications applying and at the price set opposite each item.

Delivery of any or all of the items or completion of services indicated shall be made within 30 days from receipt of order.

IMPORTANT ☞ As delivery may be a deciding factor in the award of an order, it is important that bidders furnish the information requested above.

Sign Here: [signature]

DuMOR, INC.
Name of Company

Per M. RICHARD RUDY Title PRESIDENT

Address P.O. BOX 142

City MIFFLINTOWN, PA 17059 Date 11/1/85

MBE/WBE STATEMENT

FOR
CITY OF FORT WAYNE, INDIANA

BID NO. 1229
BID DATE: 11/5/85

The City is committed to minority/women's business participation, and the Citizens' Advisory Committee is presently preparing an ordinance concerning minority and women's business participation for City contracts. This project is also governed by various affirmative action requirements including Presidential Executive Order Number 11246. To assist the City in meeting its stated goals and to further meet affirmative action requirements, the undersigned commits _____percent (_____%), as a goal, of the undersigned's total bid to minority/women's business participation. In that regard, the following MBE and/or WBE firms have been contacted to work as subcontractors:

	Name of Firm	Type of Work
1.	N/A	N/A
2.		
3.		
4.		

Submitted on: NOVEMBER 1, 1984 85

By DuMOR, INC.
(Company Name)

M. RICHARD RUDY, PRESIDENT
(Name & Title of Person Authorized to sign)

Business Address: P.O. BOX 142
MIFFLINTOWN, PA 17059

Phone Number: 717/436-2106

DuMor, inc.

February 1, 1984

To Whom It May Concern:

Be advised that in order to establish and maintain an Affirmative Action Program, the following will be considered in effect at all times:

(a) A fundamental policy of nondiscrimination of all persons will apply regardless of race, color, religious creed, handicap, ancestry, national origin, age, or sex.

(b) An equal employment opportunity will affect all employment practices including interviewing, hiring, promoting, and training.

(c) It will be the responsibility of all management personnel to participate in Affirmative Action planning, implementation, and monitoring.

(d) A work site free of discrimination and harassment (including sexual harassment) will be created and maintained.

(e) There will be provisions for equal employment opportunities for qualified handicapped applicants and employees.

(f) It is assured in offering employment and promotion to handicapped persons that no reductions in compensation will result because of disability income or other benefits.

(g) It is assured that reasonable accommodations will be made for the physical and mental limitations of handicapped applicants and employees.

(h) If any individual feels that he or she has been discriminated against, he or she should contact M. Richard Rudy, President, or Donald E. Saner, Secretary/Treasurer, of DuMor, Inc., P.O. Box 142, Mifflintown, Pennsylvania 17059, 717/436-2106; they will inform this individual of any other areas of redress.

M. Richard Rudy, President

Donald E. Saner, Secretary/Treasurer

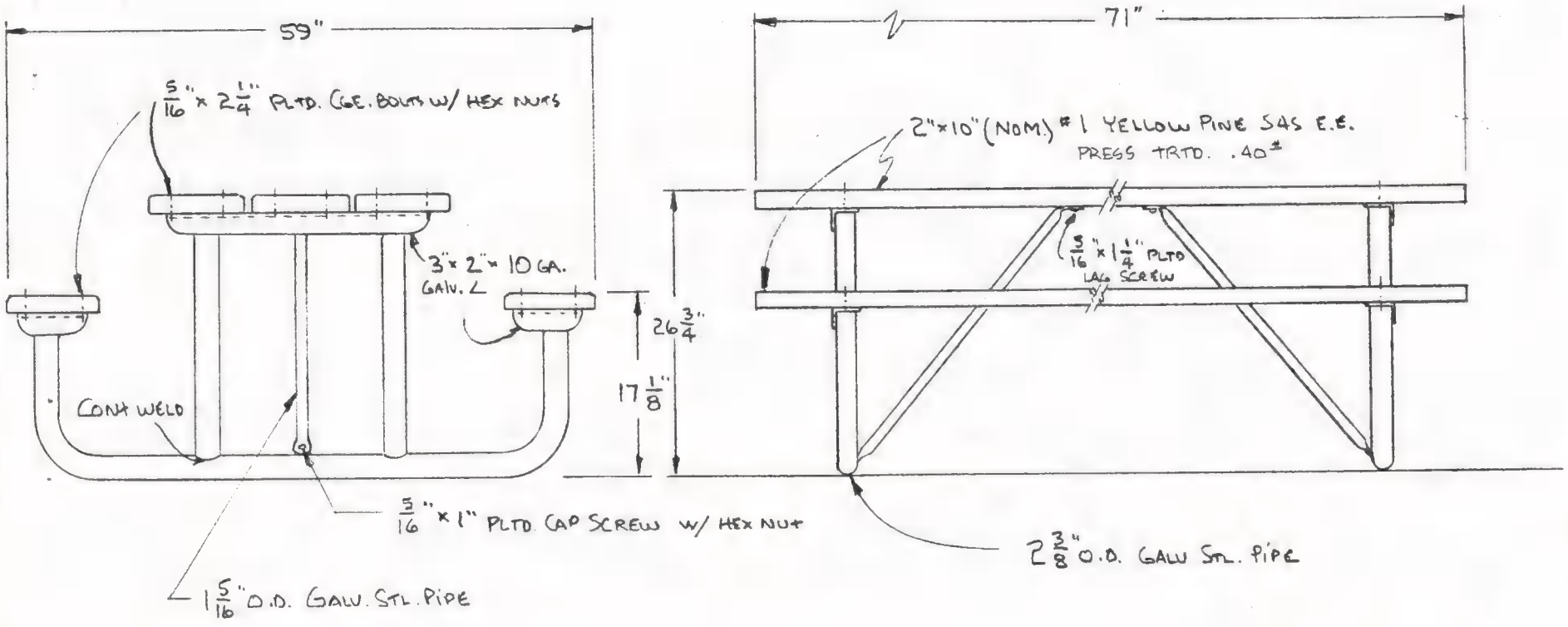

NOTE: AFTER WELDING COAT ALL WELDS WITH ZINC RICH MAT'L AS "COLD-GALV."

DuMor inc.
MIFFLINTOWN • PA. 17059

NO.	DATE	REVISION	BY	APPD.
1	5-2085	WAS 60-73	DR	

SCALE 3/4" = 1'
DATE 6·10·84
DRAWN M.R.R.

PICNIC TABLE

A | 60-195-0 P

FORM DP2B 5-68

CITY OF FORT WAYNE
DEPARTMENT OF PURCHASES
FT. WAYNE, IND.

INVITATION

Quotations, subject to the conditions on the reverse hereof, are requested on the following list of materials, supplies, equipment or services, for the department as mentioned, with delivery to destination as shown below. Quotations shall include all charges for delivery, packing, etc. Address your reply as indicated below.*

Ref. No. 1229

Date October 17, 1985

Date wanted 11/5/85

*Mail all replies and correspondence, etc. to Att. of CAROL OFFERLE: 427-1101 DEPARTMENT OF PURCHASES

Address ONE MAIN STREET, ROOM 940, FORT WAYNE, INDIANA 46802

REQUIRED FOR DELIVERY TO:

Department or Division BOARD OF PARK COMMISSIONERS
705 E. STATE BLVD

Address FORT WAYNE, INDIANA 46805

Fund Appropriation No. _____

RETURN ORIGINAL TO THE CITY — RETAIN DUPLICATE COPY FOR YOUR FILE

Closing Time of Bids NOVEMBER 5, 1985 AT 10:30 A.M.

TAXES: THE CITY IS EXEMPT FROM FEDERAL EXCISE AND INDIANA STATE SALES TAX. THE CITY'S INDIANA SALES TAX EXEMPTION CERTIFICATE NUMBER IS NO. 34508. PRICES SHOULD NOT INCLUDE THESE TAXES. See "Instructions to Bidders" No. 10 on reverse hereof for details.

TAX EXEMPT (Unless otherwise indicated)

Quantity	Unit	Materials, Supplies, Equipment or Services	Unit Price	Total Amount
		BLEACHERS AND PICNIC TABLES		
		TEN (10) SETS OF FIVE (5) ROW BLEACHERS $ 8,200.00		
		ALTERNATE BID:		
		COST PER EACH SET OVER TEN (10) SETS $ 820.00		
		EIGHTY (80) HEAVY DUTY PICNIC TABLES $ NO BID		
		ONE HUNDRED (100) HEAVY DUTY PICNIC TABLES $ " "		
		ALTERNATE BID:		
		COST PER EACH OVER EIGHTY (80) SETS $ " "		
		COST PER EACH OVER ONE HUNDRED (100) SETS $ " "		
		AFFIRMATIVE ACTION: ON FILE _____ ATTACHED X		

Bid Bond required NO ☐ YES XX 5% Performance Bond NO XX YES ☐ NOT REQUIRED

See instruction item No. 18 on reverse side hereof.

Terms 1 % cash discount if paid within 10 days from delivery and acceptance of goods or completion of services.

PROPOSAL OR BID

In compliance with the above invitation for bids and subject to all conditions thereof, the undersigned offers and agrees, if this bid be accepted within a reasonable time from date of closing, to furnish any or all of the items or render such services upon which prices are quoted, in accordance with the specifications applying and at the price set opposite each item.

Delivery of any or all of the items or completion of services indicated shall be made within 40 days from receipt of order*

IMPORTANT ☞ As delivery may be a deciding factor in the award of an order, it is important that bidders furnish the information requested above.

Sign Here: Robert Freuden

Safway Steel Products
Name of Company

Per Robert Freuden Title Cust. Serv. Mgr.

Address P. O. BOX 1991

City Milwaukee, WI 53201 Date 10-30-8

FIGGIE INTERNATIONAL

EQUAL EMPLOYMENT OPPORTUNITY POLICY

AND

AFFIRMATIVE ACTION PROGRAM

It is the policy of Figgie International Inc. to seek and employ the best qualified personnel in all of its facilities and at all its locations, to provide equal opportunities for the advancement of employees, including upgrading, promotion and training, and to administer these activities in a manner which will not discriminate against any person because of race, age, color, creed, sex or national origin. This applies to physically handicapped persons as well.

It is the policy of Figgie International Inc. to recruit and advertise all employment opportunities without regard to sex. All job policies, practices, opportunities, and all fringe benefits are administered on an equal basis without regard to sex.

The Corporate Vice President-Industrial Relations, Mr. James S. Anderson, is responsible for coordinating and implementing the Equal Employment Opportunity Affirmative Action Program.

Harry E. Figgie, Jr.
Chairman and Chief Executive Officer

March, 1985

4420 Sherwin Road • Willoughby, Ohio 44094 • (216) 946-9000

SPECTATOR SEATING DIVISION

SAFWAY

DIV. OF A-T-O INC.

SAFWAY STEEL PRODUCTS
P. O. BOX 1991
MILWAUKEE, WI 53201
PHONE (414) 258-2700

QUOTATION FOR: [X] BLEACHER [ ] DASHER [ ] RISER [ ] OTHER

LOCATION: FORT WAYNE, INDIANA DATE: 10-30-85

FOR: CITY OF FORT WAYNE

TO: CITY OF FORT WAYNE
DEPARTMENT OF PURCHASES
ATTN: CAROL OFFERLE
ONE MAIN STREET, ROOM 940
FORT WAYNE, IN 46802

ATTN:

~~QUOTATION~~ BID REF. NO. 1229

1. PRICES ARE BASED ON INFORMATION SUPPLIED PRIOR TO QUOTE DATE AND SPECIFIC VARIATIONS NOTED BELOW. SAFWAY RESERVES THE RIGHT TO REVISE THESE PRICES IF THIS INFORMATION IS MODIFIED AT A LATER DATE.
2. PRICES QUOTED ARE VALID FOR SIXTY (60) DAYS OR FOR PERIOD INDICATED.
3. PRICES ARE QUOTED FOR DELIVERY DATE INDICATED BELOW. POSTPONEMENT OF DELIVERY DATE COULD RESULT IN HIGHER PRICE DUE TO COST ESCALATIONS.
4. SAFWAY STANDARD SPECIFICATIONS, DESIGN, FINISHES, AND GUARANTEE ARE QUOTED UNLESS EXCEPTIONS ARE NOTED HEREIN.
5. TENTATIVE DELIVERY _____. ACTUAL DELIVERY COULD VARY AND WILL DEPEND UPON SHOP WORKLOAD AT TIME OF RECEIPT OF FORMAL PURCHASE ORDER. IF THIS ORDER REQUIRES APPROVAL DRAWINGS, ACTUAL DELIVERY IS BASED UPON SHOP WORKLOAD AT TIME OF RECEIPT OF ALL APPROVALS.
6. ALL QUOTATIONS ARE SUBJECT TO CREDIT APPROVAL.

PROPOSAL:

I. OUR BLEACHER BID IS BASED ON FURNISHING BUDGET MASTER BLEACHER MODEL BT5R WHICH GENERALLY CONSISTS OF:

1. WELDED TUBULAR STEEL FRAMES AND BRACING WITH A BAKED-ON GREY ENAMEL FINISH.
2. 2" x 6" CONTINUOUS WOLMANIZED GROUND SILLS FOR SECURING TO THE BASES OF ALL FRAMES.
3. 42" HIGH TUBULAR STEEL GUARD RAILING WITH MID-RAILS SPACED A MAMUM OF 9" APART AS REQUIRED BY THE UNIFORM BUILDING CODE WHICH IS ENFORCED BY THE CITY OF FORT WAYNE.
4. 2" x 10" EXTRUDED ALUMINUM SEATBOARDS AND FOOTBOARDS. SEATBOARDS WILL HAVE A CLEAR ANODIZED FINISH; FOOTBOARDS ARE MILL FINISH.

DEPARTMENT OF PURCHASES

PRICES ARE F.O.B. FORT WAYNE, INDIANA AND DO NOT INCLUDE INSTALLATION. COMPLETE INSTALLATION INSTRUCTIONS WILL BE FURNISHED.

By: Robert Freunder
SAFWAY STEEL PRODUCTS
DIV. OF A-T-O INC.

FORM DP2B 5-68

CITY OF FORT WAYNE
DEPARTMENT OF PURCHASES
FT. WAYNE, IND.

INVITATION

Quotations, subject to the conditions on the reverse hereof, are requested on the following list of materials, supplies, equipment or services, for the department as mentioned, with delivery to destination as shown below. Quotations shall include all charges for delivery, packing, etc. Address your reply as indicated below.*

Ref. No. 1229

Date October 17, 1985

Date wanted 11/5/85

*Mail all replies and correspondence, etc. to Att. of CAROL OFFERLE: 427-1101 DEPARTMENT OF PURCHASES

Address ONE MAIN STREET, ROOM 940, FORT WAYNE, INDIANA 46802

REQUIRED FOR DELIVERY TO:

Department or Division BOARD OF PARK COMMISSIONERS
705 E. STATE BLVD

Address FORT WAYNE, INDIANA 46805

Fund Appropriation No. _____

RETURN ORIGINAL TO THE CITY — RETAIN DUPLICATE COPY FOR YOUR FILE

Closing Time of Bids NOVEMBER 5, 1985 AT 10:30 A.M.

TAXES: THE CITY IS EXEMPT FROM FEDERAL EXCISE AND INDIANA STATE SALES TAX. THE CITY'S INDIANA SALES TAX EXEMPTION CERTIFICATE NUMBER IS NO. 34508. PRICES SHOULD NOT INCLUDE THESE TAXES. See "Instructions to Bidders" No. 10 on reverse hereof for details.

TAX EXEMPT (Unless otherwise indicated)

Quantity	Unit	Materials, Supplies, Equipment or Services	Unit Price	Total Amount
		BLEACHERS AND PICNIC TABLES		
		TEN (10) SETS OF FIVE (5) ROW BLEACHERS $ No Bid		
		ALTERNATE BID:		
		COST PER EACH SET OVER TEN (10) SETS $ No. Bid		
		EIGHTY (80) HEAVY DUTY PICNIC TABLES $ 108.68 ea.	108.68	8694.40
		ONE HUNDRED (100) HEAVY DUTY PICNIC TABLES $ 105.96 ea.	105.96	10596.00
		ALTERNATE BID:		
		COST PER EACH OVER EIGHTY (80) SETS $ 108.00 ea.		
		COST PER EACH OVER ONE HUNDRED (100) SETS $ 105.00 ea.		
		Bidding BV # 1006-PT as specified		
		delivery 3 to 6 weeks A.R.O.		
		AFFIRMATIVE ACTION: ON FILE _____ ATTACHED ✓		

Bid Bond required NO ☐ YES XX 5% Performance Bond XX NO ☐ YES NOT REQUIRED

See instruction item No. 16 on reverse side hereof.

Terms NET % cash discount if paid within 30 days from delivery and acceptance of goods or completion of services.

PROPOSAL OR BID

In compliance with the above invitation for bids and subject to all conditions thereof, the undersigned offers and agrees, if this bid be accepted within a reasonable time from date of closing, to furnish any or all of the items or render such services upon which prices are quoted, in accordance with the specifications applying and at the price set opposite each item.

Delivery of any or all of the items or completion of services indicated shall be made within 21-42 days from receipt of order.

IMPORTANT ☞ As delivery may be a deciding factor in the award of an order, it is important that bidders furnish the information requested above.

Sign Here:

Blue Valley Industries Inc.
Name of Company

Per Barbara A. Steffen Title Sec.-Treas.

Address P.O. Box 205

City Mexico Pa 17056 Date 10-30-85

MBE/WBE STATEMENT

FOR
CITY OF FORT WAYNE, INDIANA

BID NO. 1229
BID DATE: 11/5/85

The City is committed to minority/women's business participation, and the Citizens' Advisory Committee is presently preparing an ordinance concerning minority and women's business participation for City contracts. This project is also governed by various affirmative action requirements including Presidential Executive Order Number 11246. To assist the City in meeting its stated goals and to further meet affirmative action requirements, the undersigned commits _____percent (____%), as a goal, of the undersigned's total bid to minority/women's business participation. In that regard, the following MBE and/or WBE firms have been contacted to work as subcontractors:

	Name of Firm	Type of Work
1.		
2.		
3.		
4.		

Submitted on: _____, 1984

By _____
(Company Name)

_____
(Name & Title of Person Authorized to sign)

Business Address: _____

_____

_____

Phone Number: _____

BLUE VALLEY INDUSTRIES, INC.

MEXICO, PENNA. 17056
717—436-8266

October 30, 1985

City of Fort Wayne
Department of Purchases
Ft. Wayne, Indiana 46802

RE: Affirmative Action Program

Gentlemen:

We are a Pennsylvania Small Business with a manufacturing facility located in Juniata County, Pennsylvania. The actual physical location of the factory is in Port Royal, Pennsylvania, a small rural community, predominantly white/anglo-saxon population.

We employ a current work force of 18 employees; one female and seventeen males. All applicants were hired without regard to race, color, religious creed, ancestry, national origin, age, sex or handicap.

We have maintained our employment force over the years with no problems due to prejudice. We have a very low percentage of turn over of our work force and have made good faith efforts to meet compliance requirements of all State and Federal non-discrimination decisions.

We have several Minority Business Dealer-Representatives through out the country and from time to time deal directly or indirectly with Minority Contractors.

If you have any questions that have not been clearly defined, please do not hesitate to contact this office.

Sincerely yours,

Barbara A. Steffen

Barbara A. Steffen, Sec. - Tres.

FORM DP2B 5-68

CITY OF FORT WAYNE
DEPARTMENT OF PURCHASES
FT. WAYNE, IND.

INVITATION

Quotations, subject to the conditions on the reverse hereof, are requested on the following list of materials, supplies, equipment or services, for the department as mentioned, with delivery to destination as shown below. Quotations shall include all charges for delivery, packing, etc. Address your reply as indicated below.*

Ref. No. 1229

Date October 17, 1985

Date wanted 11/5/85

*Mail all replies and correspondence, etc. to Att. of CAROL OFFERLE: 427-1101 DEPARTMENT OF PURCHASES

Address ONE MAIN STREET, ROOM 940, FORT WAYNE, INDIANA 46802

REQUIRED FOR DELIVERY TO:

Department or Division BOARD OF PARK COMMISSIONERS

Address 705 E. STATE BLVD
FORT WAYNE, INDIANA 46805

Fund Appropriation No. _____

RETURN ORIGINAL TO THE CITY — RETAIN DUPLICATE COPY FOR YOUR FILE

Closing Time of Bids NOVEMBER 5, 1985 AT 10:30 A.M.

TAXES: THE CITY IS EXEMPT FROM FEDERAL EXCISE AND INDIANA STATE SALES TAX. THE CITY'S INDIANA SALES TAX EXEMPTION CERTIFICATE NUMBER IS NO. 34508. PRICES SHOULD NOT INCLUDE THESE TAXES. See "Instructions to Bidders" No. 10 on reverse hereof for details.

TAX EXEMPT (Unless otherwise indicated)

Quantity	Unit	Materials, Supplies, Equipment or Services	Unit Price	Total Amount
		BLEACHERS AND PICNIC TABLES		
		TEN (10) SETS OF FIVE (5) ROW BLEACHERS $_____		
		ALTERNATE BID:		
		COST PER EACH SET OVER TEN (10) SETS $_____		
		EIGHTY (80) HEAVY DUTY PICNIC TABLES $_____		
		ONE HUNDRED (100) HEAVY DUTY PICNIC TABLES $_____		
		ALTERNATE BID:		
		COST PER EACH OVER EIGHTY (80) SETS $_____		
		COST PER EACH OVER ONE HUNDRED (100) SETS $_____		
		NO BID		
		The items specified on this page are not in the JAYFRO product line.		
		AFFIRMATIVE ACTION: ON FILE _____ ATTACHED _____		

Bid Bond required NO ☐ YES XX 5% Performance Bond NO XX YES ☐ NOT REQUIRED

See instruction item No. 16 on reverse side hereof.

Terms _____% cash discount if paid within _____ days from delivery and acceptance of goods or completion of services.

PROPOSAL OR BID

In compliance with the above invitation for bids and subject to all conditions thereof, the undersigned offers and agrees, if this bid be accepted within a reasonable time from date of closing, to furnish any or all of the items or render such services upon which prices are quoted, in accordance with the specifications applying and at the price set opposite each item.

Delivery of any or all of the items or completion of services indicated shall be made within ___ days from receipt of order

IMPORTANT ☞ As delivery may be a deciding factor in the award of an order, it is important that bidders furnish the information requested above.

Sign Here:

Name of Company .....

Per ..... Title .....

Address .....

City ..... Date .....

GLEAVE
CONSTRUCTION

6001 Decatur Rd.
Fort Wayne, Indiana 46816

Phone 744-2757

Oct. 31, 1985

Carole Offerle
Department of Purchasing
Room 904
City-County Building
One Main St.
Fort Wayne, IN 46802

RE: Bid #1229

Dear Ms. Offerle:

Although we appreciate the invitation to bid on the bleachers and picnic tables for the Park Dept., we must decline to bid on this particular project.

After calling several manufacturers, we found they had also been sent bid packages on the same project. Any price these manufacturers would offer us would be significantly inflated since they plan to bid to you direct.

There is no way we could bid competitively against the manufacturers.

Again, we appreciate the invitation to bid, and regret that we will not be participating in this project.

Sincerely,

Terry Gleave

Terry Gleave
President
Gleave Construction

afa

FORM DP2B S-68

CITY OF FORT WAYNE
DEPARTMENT OF PURCHASES
FT. WAYNE, IND.

INVITATION

Ref. No. 1229

Date October 17, 1985

Date wanted 11/5/85

Fund Appropriation No. _____

Quotations, subject to the conditions on the reverse hereof, are requested on the following list of materials, supplies, equipment or services, for the department as mentioned, with delivery to destination as shown below. Quotations shall include all charges for delivery, packing, etc. Address your reply as indicated below.*

*Mail all replies and correspondence, etc. to Att. of CAROL OFFERLE: 427-1101 DEPARTMENT OF PURCHASES

Address ONE MAIN STREET, ROOM 940, FORT WAYNE, INDIANA 46802

REQUIRED FOR DELIVERY TO:

Department or Division BOARD OF PARK COMMISSIONERS
705 E. STATE BLVD

Address FORT WAYNE, INDIANA 46805

RETURN ORIGINAL TO THE CITY — RETAIN DUPLICATE COPY FOR YOUR FILE

Closing Time of Bids NOVEMBER 5, 1985 AT 10:30 A.M.

TAXES: THE CITY IS EXEMPT FROM FEDERAL EXCISE AND INDIANA STATE SALES TAX. THE CITY'S INDIANA SALES TAX EXEMPTION CERTIFICATE NUMBER IS NO. 34508. PRICES SHOULD NOT INCLUDE THESE TAXES. See "Instructions to Bidders" No. 10 on reverse hereof for details.

TAX EXEMPT (Unless otherwise indicated)

Quantity	Unit	Materials, Supplies, Equipment or Services	Unit Price	Total Amount
		BLEACHERS AND PICNIC TABLES		
		TEN (10) SETS OF FIVE (5) ROW BLEACHERS $ No Bid *		
		ALTERNATE BID:		
		COST PER EACH SET OVER TEN (10) SETS $ No Bid		
		EIGHTY (80) HEAVY DUTY PICNIC TABLES $ No Bid		
		ONE HUNDRED (100) HEAVY DUTY PICNIC TABLES $ No Bid		
		ALTERNATE BID:		
		COST PER EACH OVER EIGHTY (80) SETS $ No Bid		
		COST PER EACH OVER ONE HUNDRED (100) SETS $ No Bid		
		* We have no bid this bid because we do not manufacture a steel seat bleacher. To our knowledge, Miracle is the only company that does.		
		Please keep us on your bid list for future bids.		
		Thank you.		
		AFFIRMATIVE ACTION: ON FILE _____ ATTACHED _____		

Bid Bond required NO ☐ YES XX 5% Performance Bond NO XX YES ☐ NOT REQUIRED

See instruction item No. 18 on reverse side hereof.

Terms _____% cash discount if paid within _____ days from delivery and acceptance of goods or completion of services.

PROPOSAL OR BID

In compliance with the above invitation for bids and subject to all conditions thereof, the undersigned offers and agrees, if this bid be accepted within a reasonable time from date of closing, to furnish any or all of the items or render such services upon which prices are quoted, in accordance with the specifications applying and at the price set opposite each item.

Delivery of any or all of the items or completion of services indicated shall be made within ___ days from receipt of order

IMPORTANT ☞ As delivery may be a deciding factor in the award of an order, it is important that bidders furnish the information requested above.

Sign Here:

Sturdisteel Co.
Name of Company

Per W. W. Blair Title Sales
D. W. Blair

Address P. O. Box 949

City Waco, TX 76702-0949 Date 10-24-85

Childscapes™ Inc.
Creators of Children's Spaces

October 24, 1985

Petartment of Purchases
One Main St. Room 940
City-County Building
Fort Wayne IN 46802

RE: Bid No.: 1229
Opening: November 5, 1985

Dear Sirs:

Thank you for the invitation to bid on the above project. I regret to submit to you a "No Bid" on this request. Childscapes, Inc. is a manufacturer of wooden playground equipment and site amenities, therefore we are unable to meet your needs for this particular project.

We look to future opportunities to service the needs of the City of Fort Wayne.

Best Regards,

Alice Queen

Alice Queen
Bid Administration

Enclosures: Bid Form

aq

Post Office Box 1109 Monroe, Georgia 30655 (800) 241-7814 Monroe (404) 267-8318 Atlanta (404) 522-6167

FORM DP2B 5-68

CITY OF FORT WAYNE
DEPARTMENT OF PURCHASES
FT. WAYNE, IND.

INVITATION

Quotations, subject to the conditions on the reverse hereof, are requested on the following list of materials, supplies, equipment or services, for the department as mentioned, with delivery to destination as shown below. Quotations shall include all charges for delivery, packing, etc. Address your reply as indicated below.*

Ref. No. 1229

Date October 17, 1985

Date wanted 11/5/85

Fund Appropriation No. _____

*Mail all replies and correspondence, etc. to Att. of CAROL OFFERLE: 427-1101 DEPARTMENT OF PURCHASES

Address ONE MAIN STREET, ROOM 940, FORT WAYNE, INDIANA 46802

REQUIRED FOR DELIVERY TO:

Department or Division BOARD OF PARK COMMISSIONERS
705 E. STATE BLVD

Address FORT WAYNE, INDIANA 46805

RETURN ORIGINAL TO THE CITY — RETAIN DUPLICATE COPY FOR YOUR FILE

Closing Time of Bids NOVEMBER 5, 1985 AT 10:30 A.M.

TAXES: THE CITY IS EXEMPT FROM FEDERAL EXCISE AND INDIANA STATE SALES TAX. THE CITY'S INDIANA SALES TAX EXEMPTION CERTIFICATE NUMBER IS NO. 34508. PRICES SHOULD NOT INCLUDE THESE TAXES. See "Instructions to Bidders" No. 10 on reverse hereof for details.

TAX EXEMPT (Unless otherwise indicated)

Quantity	Unit	Materials, Supplies, Equipment or Services	Unit Price	Total Amount
		BLEACHERS AND PICNIC TABLES		
		TEN (10) SETS OF FIVE (5) ROW BLEACHERS $_____		
		ALTERNATE BID:		
		COST PER EACH SET OVER TEN (10) SETS $_____		
		EIGHTY (80) HEAVY DUTY PICNIC TABLES $_____		
		ONE HUNDRED (		
		ALTERNAT		
		COST PER EAC		
		COST PER EAC		
		AFFIRMATIVE ACTION: ON FILE _____ ATTACHED _____		

NO QUOTE

We do not have an equivilant to the materials specified.

We hope to be of service to you on other jobs.

Bid Bond required NO ☐ YES XX 5% Performance Bond NO XX YES ☐ NOT REQUIRED

See instruction Item No. 16 on reverse side hereof.

Terms _____% cash discount if paid within _____ days from delivery and acceptance of goods or completion of services.

PROPOSAL OR BID

In compliance with the above invitation for bids and subject to all conditions thereof, the undersigned offers and agrees, if this bid be accepted within a reasonable time from date of closing, to furnish any or all of the items or render such services upon which prices are quoted, in accordance with the specifications applying and at the price set opposite each item.

Delivery of any or all of the items or completion of services indicated shall be made within ___ days from receipt of order

IMPORTANT ☞ As delivery may be a deciding factor in the award of an order, it is important that bidders furnish the information requested above.

Sign Here:

MACOTTA CORPORATION
Name of Company

Per [signature] Title Asst. Sales M

Address 999 E. Mandoline

City Madison Hgts., Michigan 48071 Date 10/24/

W.H. PORTER, INC.

October 29, 1985

The City of Fort Wayne
Department of Purchases
City-County Building
Fort Wayne, Indiana 46802

Gentlemen:

Thank you for your interest in the W. H. PORTER, INC., Pre-Fabricated Building.

However, we are not able at this time to make this product that you are requesting.

Again, thank you for your interest. If I can be of further service to you, please feel free to contact me.

Sincerely,

Bret A. Scofield
Manager, Poligon Division

BAS/rm

Enclosures

FORM DP2B 5-68

CITY OF FORT WAYNE
DEPARTMENT OF PURCHASES
FT. WAYNE, IND.

INVITATION

Quotations, subject to the conditions on the reverse hereof, are requested on the following list of materials, supplies, equipment or services, for the department as mentioned, with delivery to destination as shown below. Quotations shall include all charges for delivery, packing, etc. Address your reply as indicated below.*

Ref. No. 1229

Date October 17, 1985

Date wanted 11/5/85

*Mail all replies and correspondence, etc. to Att. of CAROL OFFERLE: 427-1101 DEPARTMENT OF PURCHASES

Address ONE MAIN STREET, ROOM 940, FORT WAYNE, INDIANA 46802

REQUIRED FOR DELIVERY TO:

Department or Division BOARD OF PARK COMMISSIONERS
705 E. STATE BLVD

Address FORT WAYNE, INDIANA 46805

Fund Appropriation No. _____

RETURN ORIGINAL TO THE CITY — RETAIN DUPLICATE COPY FOR YOUR FILE

Closing Time of Bids NOVEMBER 5, 1985 AT 10:30 A.M.

TAXES: THE CITY IS EXEMPT FROM FEDERAL EXCISE AND INDIANA STATE SALES TAX. THE CITY'S INDIANA SALES TAX EXEMPTION CERTIFICATE NUMBER IS NO. 34508. PRICES SHOULD NOT INCLUDE THESE TAXES. See "Instructions to Bidders" No. 10 on reverse hereof for details.

TAX EXEMPT (Unless otherwise indicated)

Quantity	Unit	Materials, Supplies, Equipment or Services	Unit Price	Total Amount
		BLEACHERS AND PICNIC TABLES		
		EIGHT (8) SIX6 TEN ~~(10)~~ SETS OF FIVE ~~(5)~~ ROW BLEACHERS $ 4,185 x 8 sets		$33,480
		ALTERNATE BID: COST PER EACH SET OVER TEN (10) SETS $ Same		
		EIGHTY (80) HEAVY DUTY PICNIC TABLES $ _____		
		ONE HUNDRED (100) HEAVY DUTY PICNIC TABLES $ _____		
		ALTERNATE BID: COST PER EACH OVER EIGHTY (80) SETS $ _____		
		COST PER EACH OVER ONE HUNDRED (100) SETS $ _____		
		AFFIRMATIVE ACTION: ON FILE _____ ATTACHED _____		

Bid Bond required NO ☐ YES XX 5% Performance Bond XX NO ☐ YES NOT REQUIRED

See instruction item No. 16 on reverse side hereof.

Terms _____% cash discount if paid within _____days from delivery and acceptance of goods or completion of services.

PROPOSAL OR BID

In compliance with the above invitation for bids and subject to all conditions thereof, the undersigned offers and agrees, if this bid be accepted within a reasonable time from date of closing, to furnish any or all of the items or render such services upon which prices are quoted, in accordance with the specifications applying and at the price set opposite each item.

Delivery of any or all of the items or completion of services indicated shall be made within ___ days from receipt of order

IMPORTANT ☞ As delivery may be a deciding factor in the award of an order, it is important that bidders furnish the information requested above.

Sign Here:

DOUBLET FESTITURE Inc
Name of Company

Per Corinne McKendry Title General Mgr.

Address 41-21 28th Street

City Long Island City, NY 11101 Date 11-01-85

DOUBLET FESTITUBE

41-21 28th STREET
LONG-ISLAND CITY, NEW-YORK 11101
Tel: 718-706-6216
Fax: 718-784-7684

NOTICE :

WE CAN NOT MANUFACTURE EXACTLY THE BLEACHER TYPE MIRACLE. NEVERTHELESS, WE WOULD LIKE TO GIVE YOU A QUOTATION OF OUR HIGH SAFETY EQUIPMENT. PLEASE CONSIDER IT AS AN OPTION IN YOUR BID.

WE HOPE THAT YOU WILL JOIN THE SAFETY CONSCIOUS WORLD OF DOUBLET. THANK YOU FOR YOUR INTEREST IN OUR EQUIPMENT.

CORINNE M. DERETZ
GENERAL MANAGER

DOUBLET FESTITUBE

41-21 28th STREET
LONG-ISLAND CITY, NEW-YORK 11101
Tel: 718-706-6216
Fax: 718-784-7684

HIGH SAFETY BLEACHERS

The High Safety bleacher, Doublet D.F. 700 is a portable bleacher for outdoor use. The standard design allows the bleacher to be built up in unit sections which can be placed side by side to form a continuous row of seatings.

STRENGTH :

Doublet D.F.700 is designed to support, in addition to its weight, a live load of more than 100 p.s.f.

FRAME :

The frame is made of square tubes. All the metal parts after welding are hot galvanized in and out to provide total protection against corrosion.

CROSSBARS :

The main crossbar and upright sections are made of square tubing.

DOUBLET FESTITUBE

41-21 28th STREET
LONG-ISLAND CITY, NEW-YORK 11101
Tel: 718-706-6216
Fax: 718-784-7684

GUARDRAILS :

The side and rear guardrails provide safety for spectators. They are fitted into the crossbar and upright sections.

ACCESS :

Access aisle is provided in 3.3 ft wide.

PLANKING :

The planking is made of marine quality plywood of 9.85 inches, specially treated for outdoor use. The interlocking system makes the planking easy to display. (see pictures).

SEATS :

The seats are made of a special treated wood, called SIPO. SIPO is an exotic wood, specially choosen forits resistance to weather conditions.

ASSEMBLY :

The bleacher Doublet D.F.700 is easy to set up by means of socket joints.

DOUBLET FESTITUBE

41-21 28th STREET
LONG-ISLAND CITY, NEW-YORK 11101
Tel: 718-706-6216
Fax: 718-784-7684

JOIN THE SAFETY CONSCIOUS WORLD OF DOUBLET :

* The guardrails extend from the last row to the first rows for adequate protection. They are set up on the rear and on the sides with vertical bars to offer better safety for spectators and especially children.
The horizontal guardrail on the competitors products creates a substantial risk that children will fall through. Doublet bleachers on the other hand provide vertical guardrails which reduce the risk of accidents.

* The access aisles are essential for a quick evacuation in case of accident or panic. For an efficient safety, one spectator is not supposed to walk in front of more than 10 persons to evacuate the bleacher.

* The closed deck is also designed for safety. It allows for easy maintenance because items are not able to fall below the bleacher. A side for maintenance purposes, the closed deck also protects against accident involving adults or small children who may fit between the opening.

DOUBLET FESTITUBE

41-21 28th STREET
LONG-ISLAND CITY, NEW-YORK 11101
Tel: 718-706-6216
Fax: 718-784-7684

DESCRIPTION :

Eight (8) units of 20 ft each
Six (6) rows high
One (1) access aisle for each unit
Sixty three (63) seats per unit.... 63 seats x 8 units = 504 seats.

Quotation : $ 4,185 per unit..... $ 4,185.00 x 8 units = $ 33,480.00

Row rise : 0.65 ft

Row depth : 2.3 ft

ELEMENTS OF THE DOUBLET D.F.700

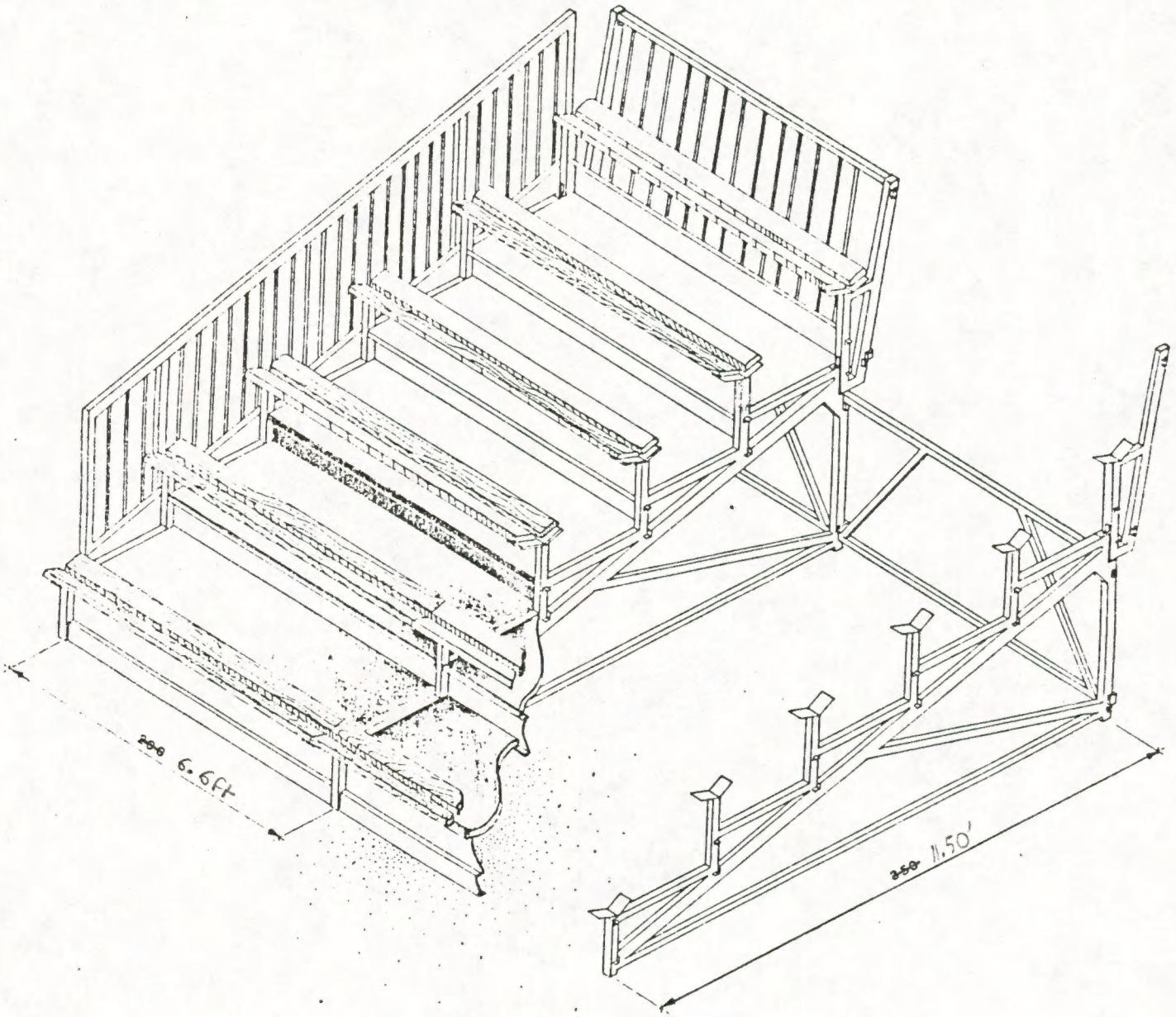

DOUBLET FESTITUBE

41-21 28th STREET
LONG-ISLAND CITY, NEW-YORK 11101
Tel: 718-706-6216
Fax: 718-784-7684

City of Fort Wayne
Department of Purchases
Attn : Carol Offerle
One Main Street, Room 940
Fort Wayne, Indiana 46802

November 1rst 1985

Dear Mrs Offerle,

Following your request (Bid number 1229-October 17th 1985), we are pleased to send you the quotation for the bleachers.

We thank you very much for your interest in Doublet equipment and hope you will join the safety conscious World of Doublet.

Looking forward to hearing from you.

Sincerely yours,

Corinne M. Deretz
General Manager

CMD/vd
Enclosures.

7187

S-F5-12-05

DIGEST SHEET

TITLE OF ORDINANCE: SPECIAL

DEPARTMENT REQUESTING ORDINANCE: PURCHASING

SYNOPSIS OF ORDINANCE:

AN ORDINANCE APPROVING CIVIL CITY PURCHASE ORDER #A-45756 FOR THE PURCHASE OF 120 PICNIC TABLES FOR THE PARK DEPARTMENT PER THE SPECIFICATIONS IN REFERENCE #1229.

EFFECT OF PASSAGE:

TO REPLACE PICNIC TABLES IN VARIOUS PARKS DAMAGED THRU AGE AND OTHER REASONS, AND TO ADD MORE TABLES TO DIFFERENT PARKS BECAUSE OF HIGH DEMAND AND PRESENT SHORTAGE. PARK USE CONTINUES TO GROW.

EFFECT OF NON-PASSAGE:

THERE WILL NOT BE ENOUGH TABLES TO ACCOMMODATE DEMAND, AND WILL CONTINUE TO RECEIVE REQUEST FOR MORE TABLES WITHOUT BEING ABLE TO HONOR THOSE REQUESTS.

MONEY INVOLVED (Direct costs, Expenditures, Savings):

BLUE VALLEY INDUSTRIES, INC. $12,696.00

ASSIGNED TO COMMITTE (President):

BILL NO. S-85-12-05

REPORT OF THE COMMITTEE ON FINANCE

WE, YOUR COMMITTEE ON FINANCE TO WHOM WAS REFERRED AN (ORDINANCE) ~~(RESOLUTION)~~ AN ORDINANCE approving ~~Purchase Order #A-45756 with Blue Valley Industries, Inc., for the Department of Parks and Recreation of the City of Fort Wayne, Indiana.~~ Civil City

HAVE HAD SAID (ORDINANCE) (RESOLUTION) UNDER CONSIDERATION AND BEG LEAVE TO REPORT BACK TO THE COMMON COUNCIL THAT SAID (ORDINANCE) (RESOLUTION) DO PASS DO NOT PASS WITHDRAWN

YES		NO
Ben A. Eisbart	BEN A. EISBART CHAIRMAN	
Janet G. Bradbury	JANET G. BRADBURY VICE CHAIRWOMAN	
Samuel J. Talarico	SAMUEL J. TALARICO	
Thomas C. Henry	THOMAS C. HENRY	
	JAMES S. STIER	

CONCURRED IN 12-23-85

SANDRA E. KENNEDY
CITY CLERK